WRFL
ROAD TO GLORY
FINAL 4 SYSTEM
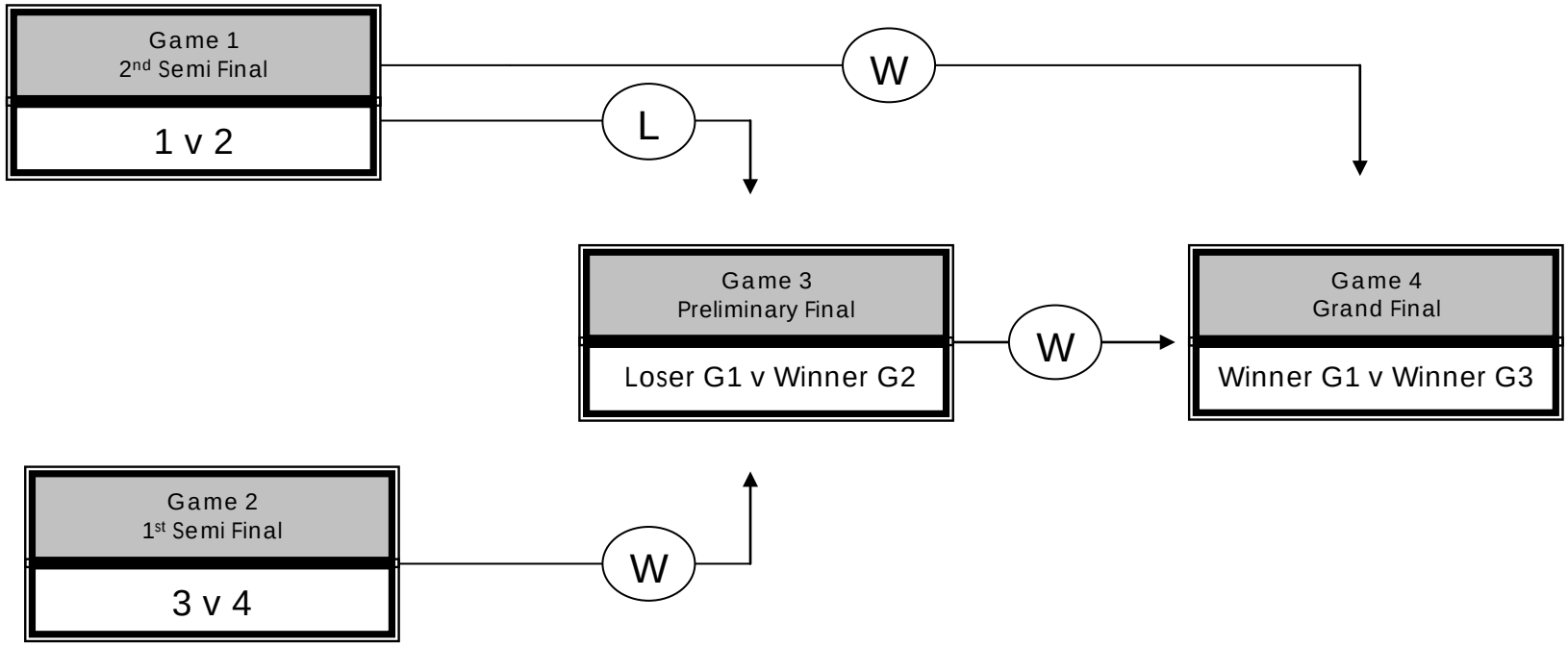
This Format is used for the U16A, U16B, U14A, U14B, U13A, U13B and U12C competitions.